Blanking Line

Production Products, Inc. (Columbus Grove, OH)
Automotive Supplier, Blanking Press Feed Line

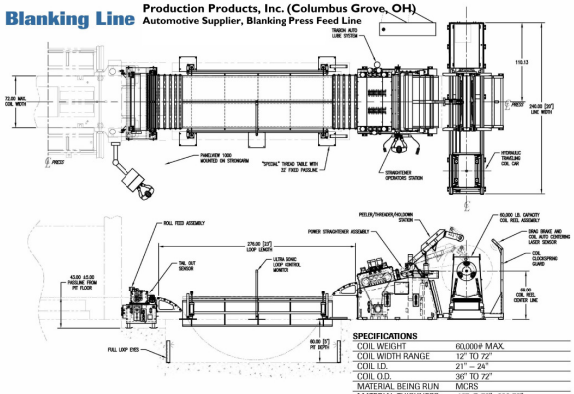

SPECIFICATIONS

COIL WEIGHT	60,000# MAX.
COIL WIDTH RANGE	12" TO 72"
COIL I.D.	21" – 24"
COIL O.D.	36" TO 72"
MATERIAL BEING RUN	MCRS
MATERIAL THICKNESS	.187 @ 72", .030 72"
FEED LENGTH ACCURACY	+/- .003"
LINE SPEED	120 FPM
FEED DIRECTION	RIGHT TO LEFT
PASSLINE HEIGHT	31" +/- 5" ABOVE FLOOR
LUBRICATION	TRABON AUTOMATIC SYSTEM
CONTROLS	ALLEN BRADLEY
LINE VOLTAGE	460 V., 3 PH., 60 Hz

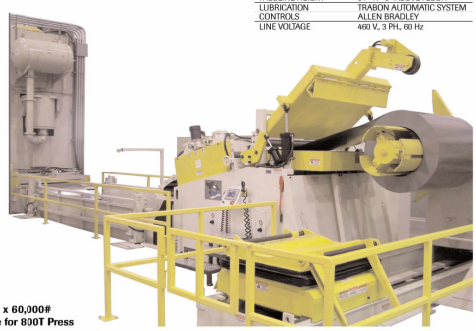

72" wide x 60,000#
Blanking Line for 800T Press